

BUILDINGEYE

+86-769-82078888 +86-769-87732448
400-6789-443 www.ifelift.com

002774

快意电梯

5 5 8

+86-0991-5850699 322 A 9D



CLASSICAL & GRACEFUL

IFE BUILDINGEYE-JO,BUILDINGEYE-ME

BUILDINGEYE-JO,BUILDINGEYE-ME IFE
BUILDINGEYE-JO,BUILDINGEYE-ME

BUILDINGEYE-JO, BUILDINGEYE-ME,embodies the simpleness and elegance by its beautiful shape, inner decoration,and fashinable design. Whenever you ride it , you will see that the ceiling and the floor maps each other, metal car door matches transparent glass which reflects modern atmosphere.
BUILDINGEYE-JO,BUILDINGEYE-ME panoramic elevator interpreter IFE on the building function and aesthetics to grasp vividly rendered, so that BUILDINGEYE -JO, BUILDINGEYE-ME in the construction both inside and outside with a wealth of appeal.

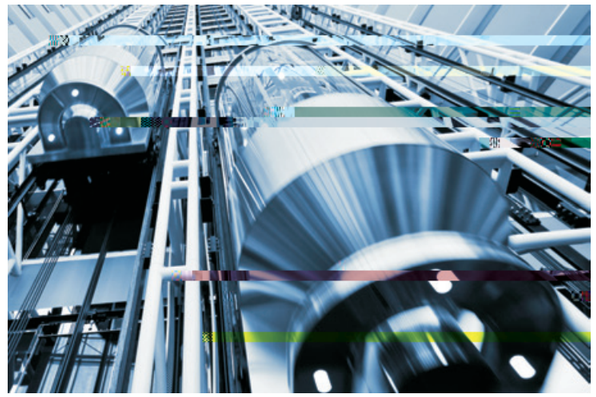

market hotel scenic spot

DOMESTIC REPRESENTATIVE CASES

IFE
IFE
IFE
IFE
IFE

Every project is significant footpaint of IFE history, there are over ten thousand project have witnessed the great contribution of the IFE's products. IFE will keep going to contribute our effort to provide the best transportation equipment to the world.



AAAA

Shijiazhuang Cloud Dream Mountain AAAA Scenic Spot Sightseeing Ladder



Changsha Gaoqiao Market Develop CO.,LTD.



Huizhou Panda Real Estate



Hotel Good View Sangem Dongguan



Dongguan Yinli Golf Club



Tianjin Academy of Social Sciences



Heyuan Huada Group Landed Estate CO.,LTD.



Nanchang Imperial Kairui Hotel



Nanchang Civil Industrial Co., LTD.



Chongqing Tianma Real Estate Development CO.,LTD.



Shenzhen Baoan Zhonglv Hotel



Shenzhen Jialeyuan Home Decorate CO.,LTD.



Shenzhen Dongfang Yadian International Business Hotel



Dongguan Zhengyu Property CO.,LTD.



Zhuzhou Shunyi Real Eatate Development CO.,LTD.

FOREIGN REPRESENTATIVE CASES



RIENTAL PLAZA

South Africa MRIENTAL PLAZA



Sha-Ali

Bangladesh Sha-Ali Shopping



MISHREFLN-4124

Kuwait LN-4124 NATIONAL SECURITY BUREAU AT MISHREF



MASHARY

Kuwait MASHARY MALL



Existing Village Hotel Albert Court

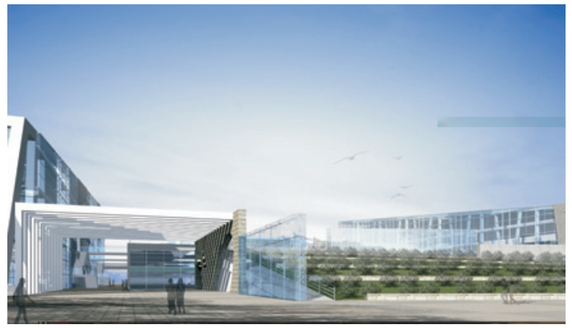

AL JURF

COMMERCIAL BUILDING AT AL JURF, AJMAN. UAE



CILEUNGSI

Indonesia METROPOLITAN MALL CILEUNGSI



Bahrain Greenland Danga Bay

SAFETY GUARANTEE , TECHNOLOGY SUPPORTING

UCMP

ZL201320606488.3

UCMP for Preventing Unintended Car Movement
Patent No. 201320606488.3

Unintended Car Movement Protection system(UCMP) prevents car unintended movement in the door opening area, prevents the risk of accidental movement of the car, and protects the safety of the passengers.

ZL201420470694.0

Anti-loosen Detection of Steel Rope for Protecting Riding Safety
Patent No. 201420470694.0

Whole-process real-time detected by anti-loosen detection of steel rope device. The elevator stops running immediately ensuring passengers safety if steel rope loose.

ZL201410337015.7

Alarmed for Overloading Alert by Precisely Weighing Technology
Patent No.201410337015.7

Accurately measure car load at each landing floor by using the industry-leading weighing technology to avoid potential safety hazard and accidental injuries caused by overloading.

ZL201621450975.5

New Electrical Design Door Lock for Preventing Risk of Door Lock Short-circuited
Patent No. 201621450975.5

Prevent electrical circuit of elevator door lock and switch contact of door lock being man-made short circuit cause elevator to operate in the door opening condition, thus avoiding the risk of accident.





PEOPLE-ORIENTED, CREATIVE AND UNIQUE

EMC

EMC

Authoritative CE certification,EMC Standard

Product is CE-approved and complies with EMC and environmental standards, giving passengers safety protection by low radiation without electromagnetic pollution.

BUILDINGEYE

Design of unique Waterproof structure of Outdoor sightseeing ladder (optional)

BUILDINGEYE series sightseeing elevator is original, outdoor sightseeing elevator adopts unique waterproof structure design, car does not enter water, leakage, calmly cope with a variety of complex weather, adapt to a variety of complex operating environment, the quality is as good as one.

IFE

Outdoor sightseeing ladder equipped with accompanying cable windproof control system (optional)

IFE can be equipped with wind-proof control system for outdoor sightseeing elevator cable. the cable operates with the car up and down without the influence of wind, the car does not shake, does not fear any harsh open-air environment, and it is safer to travel.

High-strength tempered glass, breaking and not falling off

Sightseeing sedan chair wall and door, layer door are high strength toughened adhesive glass. Solid and durable. Even if broken, will not fall, to further ensure the safety of passengers, ride without worry.

LED

LED ,

LED car lighting leads the new wave of energy-saving elevators

All cars are equipped with LED lighting devices, which respond to the national call for energy saving, safe,efficient, radiation-free and easy to maintain. It is a modern model of healthy and green living.

45%

40 45% 5 10dB(A)

The energy saving of environmental protection driving system is up to 45%

The elevator is innovatively driven by permanent magnet synchronous traction machine to improve the operation efficiency, with low starting current, small volume and low noise. Compared with the elevator driven by worm wheel and worm, the elevator saves energy by 40-45% and reduces noise by 5-10db (A).

IFE

Intelligent control system to save more energy

IFE responds to green environmental needs and creates green driven elevators for customers. For example, when no one is in the elevator, the intelligent control system enables lighting, ventilation and so on to automatically switch to standby mode.



BEC01-00

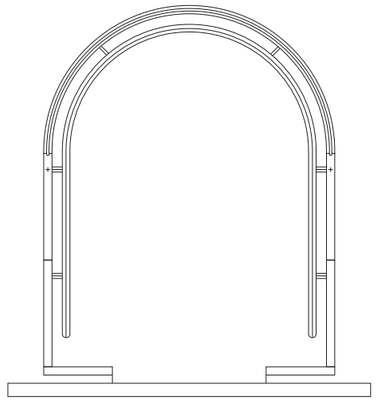

C50-00 +
COP11-00
CW98-00 +
L01-00
F03-00 PVC
CC01-00 +
H20-00

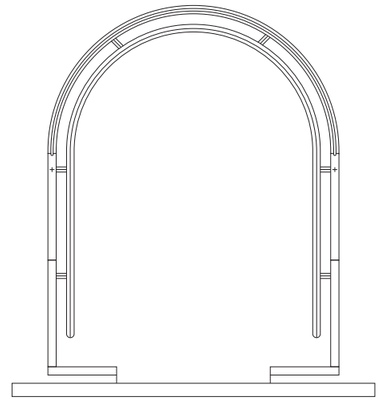

+PC +L ED
COP11-00
CW98-00 +
L01-00
F03-00 PVC
CC02-00 -00

01-00¾ _

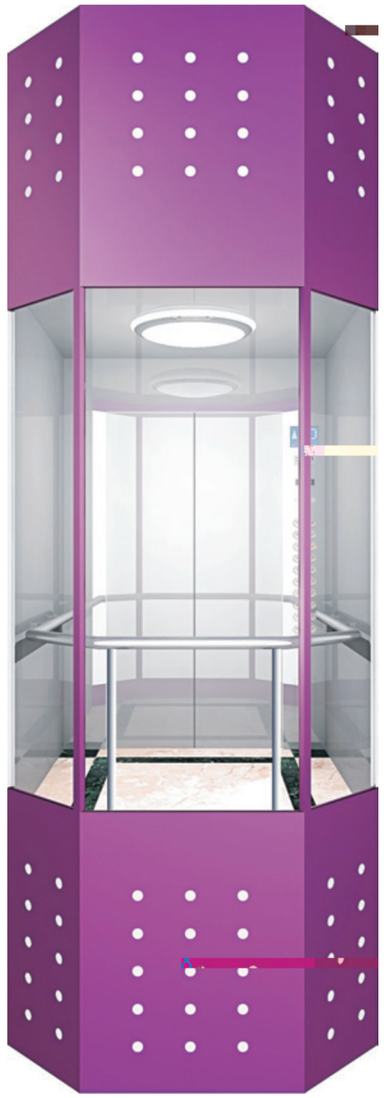



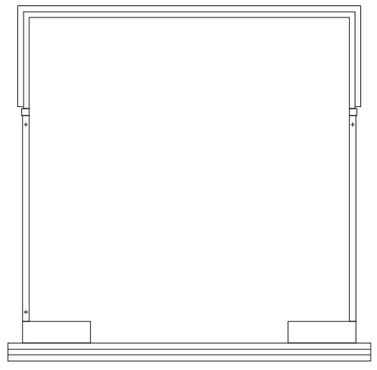

轿厢装饰规格

DECORATION CONFIGURATION



COP34-00( )
:
:

COP34-00(Standard)
Panel: Hairline Stainless Steel
Display: White Dot-matrix



COP39-00( )
:
:

COP39-00(Optional)
Panel: Hairline Stainless Steel
Display: White Dot-matrix

COP16-00( )
:
:

COP16-00(Optional)
Panel: Hairline Stainless Steel
Display: Single Color LCD



HOP37-00( )
:
:

HOP37-00(Standard)
Panel: Hairline Stainless Steel
Display: White Dot-matrix



HOP41-00( )
:
:

HOP41-00(Optional)
Panel: Hairline Stainless Steel
Display: White Dot-matrix



HOP38-00( )
:
:

HOP38-00(Optional)
Panel: Hairline Stainless Steel
Display: White Segment Code

FLOORS



F01-01



F01-04



F01-05



F01-06

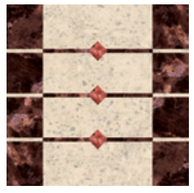

F01-07



F01-08



F02-03



F02-04

Standard functions

21	RMG	Reversal movement Guard	
22	BG	Breaker guard	
23	CNRP	Contactor non-releasing protection	
24	FSSES	Speed limited switching in terminator	
25	BUFER	Buffer	
26	MSCP	Microcomputer self-check protection	
27	ALRF	Anti-locked rotor feature of motor	
28	FS	Fault storage	
29	SDCB	Star-delta contactor brake	0.1m/s
30	RALP	Rope Anti-loose Protection	
35	DCD	Door circuit detection	

Special operating

36		
37	BS	
38		
39		
40		

Standard functions

Special operating

41	FFS	Firefighting floor setting
42	IO	Inspection operation
43	FCPS	Flexible car park set

Man-machine interface

44	DMPI	Dot-matrix(red) position indicator
45	DMDI	Dot-matrix(red)
46	FMFS	Floor market flexible set
47	AG	Arrival gong

		Alarm button
		Emergency car lighting
50		Five station intercom 4x0.75mm2 (≤1800)
51	EFO	Emergency fire operation
		Fireman's operation
53		Emergency rescure

Energy-savi

		Parking service
55	ATOO	Automatic turn off/on

Optional functions

01	DCO	Duplex Control Operation
02	GCO	Group Control Operation 3 8
03	IADO	In Advance Door Opening
04	REL	Re-leveling
05	ARD	Automatic rescue device
06	E	Elevator Air Conditioner
07		Power Filter EMC
08		Power regeneration device
09		Community Monitoring System
1		
1		
1		
		Braille'G Yf
2		TVC
21		
22		
23		
24	D	

BUILDINGEYE-JO

BUILDINGEYE-JO TECHNICAL SPECIFICATION

NO.	Specification		630(8 /p)			800(10 /p)			1050(14 /p)			1350(18 /p)	1600(21 /p)
01	kg Rated capacity(kg)		630			800			1050			1350	1600
02	Car shape												
03	m/s Speed(m/s)		1.0 1.75	1.0 1.75	1.0 1.75	1.0 1.75	1.0 1.75	1.0 1.75	1.0 1.75	1.0 1.75	1.0 1.75	1.0 1.75	1.0 1.75
04	Control system		Full collective operation										
05	Driving system		VVVF VVVF Driving										
06	Door control		VVVF VVVF Door control										
07	Traction machine		PM/Gearless										
08	Communication method		Serial Communication										
09	* * (mm) Car size(width*depth*height)		1100* 1400* 2350	1100*1550*2350		1300* 1450* 2350	1300*1600*2350		1500* 1600* 2350	1500*1700*2350		1700*1900*2350	1700*2200*2350
10	* (mm) Door opening size(width*height)		800*2100			800*2100			900*2100			1100*2100	1100*2100
11	(m) Travel height(TR)	1.0m/s	≤ 45			≤ 45			≤ 45			≤ 45	≤ 45
		1.75m/s	≤ 75			≤ 75			≤ 75			≤ 75	≤ 75
12	* (mm) Hoistway size (width*height)		2200* 1850	2200*2050		2400* 1950	2400*2050		2600* 2050	2600*2150		3050*2350	3050*2650
13	Motor position		In the top of the shaft										
14	(mm) Overhead(OH)	1.0m/s	4700	4700	4700	4700	4700	4700	4700	4700	4700	4700	4700
		1.75m/s	4900	4900	4900	4900	4900	4900	4900	4900	4900	4900	4900
15	(mm) Pit depth(PD)	1.0m/s	1500	1700	1600	1500	1800	1600	1500	1900	1600	2000	2000
		1.75m/s	1650	1850	1750	1650	1950	1750	1650	2050	1750	2150	2150
16	Main power supply		380V 50Hz ≤ 4Ω										
		1.0m/s	3*6mm²+2*6mm²									3*10mm²+2*6mm²	
		1.75m/s	3*6mm²+2*6mm²						3*10mm²+2*6mm²				

≤ 700mm

Note The following overhead height is only applicable for the elevators that are not inside steel structure shaft and those elevators with car top is no more than 700mm away from the shaft wall.

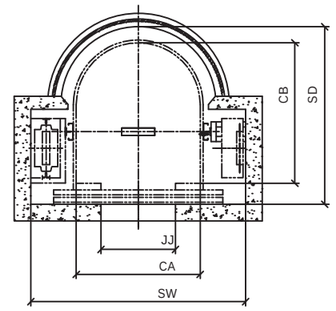

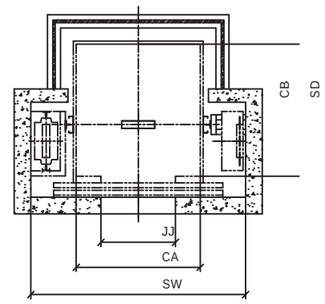

NO.	Specification	630(8 /p)	800(10 /p)	1050(14 /p)	1350(18 /p)	1600(21 /p)
01	kg Rated capacity(kg)	630	800	1050	1350	1600
02		eei ee				
03	m/s Speed(m/s)	ed mQ l lq 3	L	$.	6 Ë	v š m

ꞁ 6 Ë u ừ ꞁ ė ở ŏ 3

CB SD

JJ

CA

SW

Diamond panoramic elevator shaft plan

shaft section plan