北

部

区



# CLASSICAL & GRACEFUL

IFE BUILDINGEYE-JO,BUILDINGEYE-ME

BUILDINGEYE-JO,BUILDINGEYE-ME IFE
BUILDINGEYE-JO,BUILDINGEYE-ME

BUILDINGEYE-JO, BUILDINGEYE-ME,embodies the simpleness and elegance by its beautiful shape, inner decoration,and fashinable design. Whenever you ride it , you will see that the ceiling and the floor maps each other, metal car door matches transparent glass which reflects modern atmosphere.
BUILDINGEYE-JO,BUILDINGEYE-ME panoramic elevator interpreter IFE on the building function and aesthetics to grasp vividly rendered, so that BUILDINGEYE -JO, BUILDINGEYE-ME in the construction both inside and outside with a wealth of appeal.

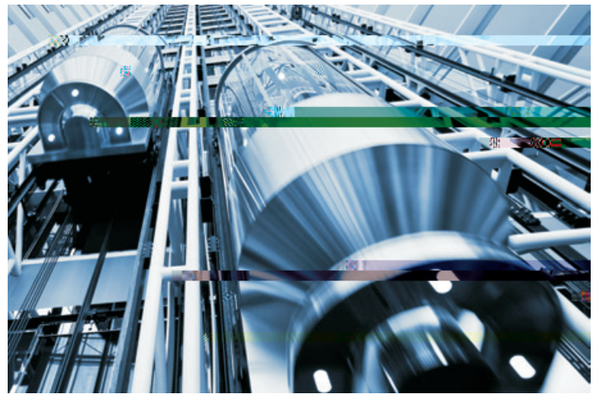

market

hotel

scenic spot

# DOMESTIC REPRESENTATIVE CASES

IFE

IFE

IFE

IFE

IFE

Every project is significant footpaint of IFE history, there are over ten thousand project have witnessed the great contribution of the IFE's products. IFE will keep going to contribute our effort to provide the best transportation equipment to the world.



AAAA

Shijiazhuang Cloud Dream Mountain AAAA Scenic Spot Sightseeing Ladder



Changsha Gaoqiao Market Develop CO.,LTD.



Huizhou Panda Real Estate





Hotel Good View Sangem Dongguan



Dongguan Yinli Golf Club



Tianjin Academy of Social Sciences



Heyuan Huada Group Landed Estate CO.,LTD.



Nanchang Imperial Kairui Hotel



Nanchang Civil Industrial Co., LTD.



Chongqing Tianma Real Estate Development CO.,LTD.



Shenzhen Baoan Zhonglv Hotel



Shenzhen Jialeyuan Home Decorate CO.,LTD.




Shenzhen Dongfang Yadian International Business Hotel



Dongguan Zhengyu Property CO.,LTD.



Zhuzhou Shunyi Real Eatate Development CO.,LTD.

# FOREIGN REPRESENTATIVE CASES



RIENTAL PLAZA

South Africa MRIENTAL PLAZA



Sha-Ali

Bangladesh Sha-Ali Shopping



MISHREFLN-4124

Kuwait LN-4124 NATIONAL SECURITY BUREAU AT MISHREF





MASHARY

Kuwait MASHARY MALL



Existing Village Hotel Albert Court



AL JURF

COMMERCIAL BUILDING AT AL JURF, AJMAN. UAE



CILEUNGSI

Indonesia METROPOLITAN MALL CILEUNGSI



Bahrain Greenland Danga Bay

# SAFETY GUARANTEE , TECHNOLOGY SUPPORTING

## UCMP

ZL201320606488.3

### UCMP for Preventing Unintended Car Movement
### Patent No. 201320606488.3

Unintended Car Movement Protection system(UCMP) prevents car unintended movement in the door opening area, prevents the risk of accidental movement of the car, and protects the safety of the passengers.

ZL201420470694.0

### Anti-loosen Detection of Steel Rope for Protecting Riding Safety
### Patent No. 201420470694.0

Whole-process real-time detected by anti-loosen detection of steel rope device. The elevator stops running immediately ensuring passengers safety if steel rope loose.

ZL201410337015.7

### Alarmed for Overloading Alert by Precisely Weighing Technology
### Patent No.201410337015.7

Accurately measure car load at each landing floor by using the industry-leading weighing technology to avoid potential safety hazard and accidental injuries caused by overloading.

ZL201621450975.5

### New Electrical Design Door Lock for Preventing Risk of Door Lock Short-circuited
### Patent No. 201621450975.5

Prevent electrical circuit of elevator door lock and switch contact of door lock being man-made short circuit cause elevator to operate in the door opening condition, thus avoiding the risk of accident.







# PEOPLE-ORIENTED, CREATIVE AND UNIQUE

## EMC

EMC

### Authoritative CE certification,EMC Standard

Product is CE-approved and complies with EMC and environmental standards, giving passengers safety protection by low radiation without electromagnetic pollution.

BUILDINGEYE

### Design of unique Waterproof structure of Outdoor sightseeing ladder (optional)

BUILDINGEYE series sightseeing elevator is original, outdoor sightseeing elevator adopts unique waterproof structure design, car does not enter water, leakage, calmly cope with a variety of complex weather, adapt to a variety of complex operating environment, the quality is as good as one.

IFE

### Outdoor sightseeing ladder equipped with accompanying cable windproof control system (optional)

IFE can be equipped with wind-proof control system for outdoor sightseeing elevator cable. the cable operates with the car up and down without the influence of wind, the car does not shake, does not fear any harsh open-air environment, and it is safer to travel.

### High-strength tempered glass, breaking and not falling off

Sightseeing sedan chair wall and door, layer door are high strength toughened adhesive glass. Solid and durable. Even if broken, will not fall, to further ensure the safety of passengers, ride without worry.

LED │a╕ ┼i┘ hti ‖ ┘ ln╗ l┼i┘ ┐ nt │ ╒ntrol ╖ ╜ ╥tm

## LED

LED ,

## LED car lighting leads the new wave of energy-saving elevators

All cars are equipped with LED lighting devices, which respond to the national call for energy saving, safe,efficient, radiation-free and easy to maintain. It is a modern model of healthy and green living.

45%

40 45% 5 10dB(A)

## The energy saving of environmental protection driving system is up to 45%

The elevator is innovatively driven by permanent magnet synchronous traction machine to improve the operation efficiency, with low starting current, small volume and low noise. Compared with the elevator driven by worm wheel and worm, the elevator saves energy by 40-45% and reduces noise by 5-10db (A).

IFE

## Intelligent control system to save more energy

IFE responds to green environmental needs and creates green driven elevators for customers. For example, when no one is in the elevator, the intelligent control system enables lighting, ventilation and so on to automatically switch to standby mode.



BEC01-00

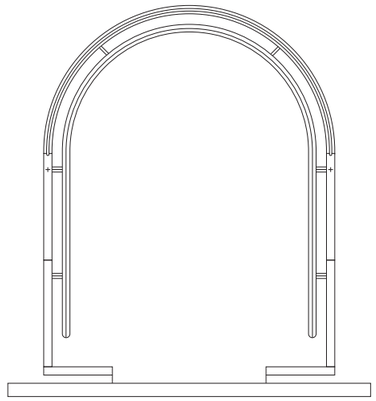

C50-00 +
COP11-00
CW98-00 +
L01-00
F03-00 PVC
CC01-00 +
H20-00

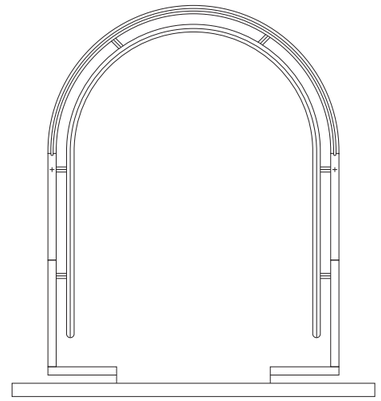

+PC +L ED
COP11-00
CW98-00 +
L01-00
F03-00 PVC
CC02-00 -00

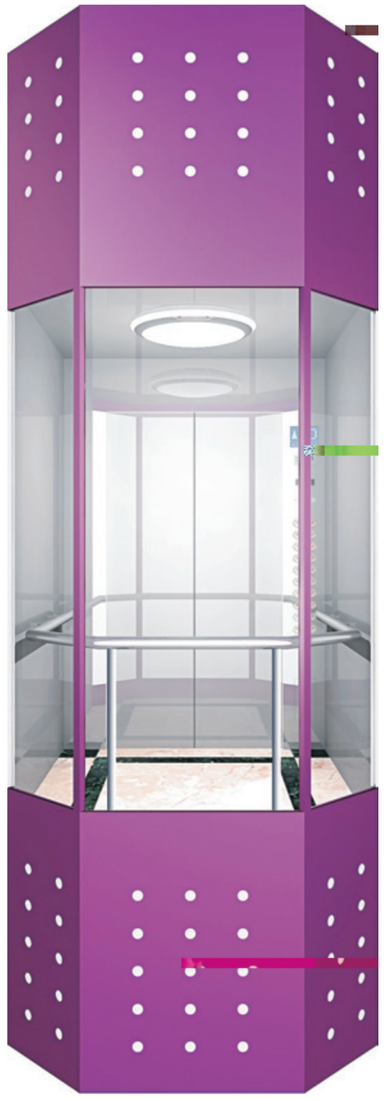



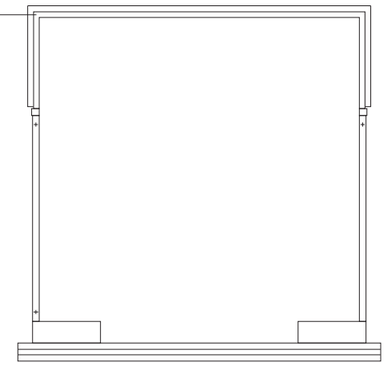

轿厢装饰规格

# DECORATION CONFIGURATION



COP34-00( )
:
:

COP34-00(Standard)
Panel: Hairline Stainless Steel
Display: White Dot-matrix



COP39-00( )
:
:

COP39-00(Optional)
Panel: Hairline Stainless Steel
Display: White Dot-matrix

COP16-00( )
:
:

COP16-00(Optional)
Panel: Hairline Stainless Steel
Display: Single Color LCD





HOP37-00( )
:
:

HOP37-00(Standard)
Panel: Hairline Stainless Steel
Display: White Dot-matrix



HOP41-00( )
:
:

HOP41-00(Optional)
Panel: Hairline Stainless Steel
Display: White Dot-matrix



HOP38-00( )
:
:

HOP38-00(Optional)
Panel: Hairline Stainless Steel
Display: White Segment Code

## FLOORS



F01-01



F01-04



F01-05



F01-06

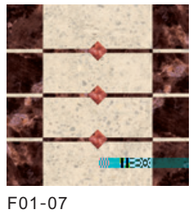

F01-07



F01-08



F02-03

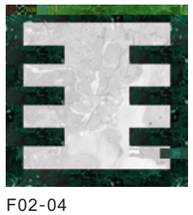

F02-04

erlock Door Int

DI₵ ǫ



## Standard functions

| | | | |
|---|---|---|---|
| 21 | RMG | Reversal movement Guard | |
| 22 | BG | Breaker guard | |
| 23 | CNRP | Contactor non-releasing protection | |
| 24 | FSSES | Speed limited switching in terminator | |
| 25 | BUFER | Buffer | |
| 26 | MSCP | Microcomputer self-check protection | |
| 27 | ALRF | Anti-locked rotor feature of motor | |
| 28 | FS | Fault storage | |
| 29 | SDCB | Star-delta contactor brake | 0.1m/s |
| 30 | RALP | Rope Anti-loose Protection | |
| | Anti - | [illegible] collection | |
| | | A bð@Q÷Ÿµ*•ðÆÝcÆÃ‡Œ @vÑ&Šˆ Åq o -_VÀ ¶ü À ð Ð | |
| | | | |
| | | | |
| 35 | DCD | Door circuit detection | |

## Special operating

| | |
|---|---|
| 36 | |
| 37 | BS |
| 38 | |
| 39 | |
| 40 | |



eu tion l ɔ Ind l s Ÿ ố ƀ Ÿ Ω 5Ğ n ƶ . ᵉ Lerlock ⊥ B L ‹ ‹ ƶ ƶ Door

## Standard functions

### Special operating

| | | |
|---|---|---|
| 41 | FFS | Firefighting floor setting |
| 42 | IO | Inspection operation |
| 43 | FCPS | Flexible car park set |

### Man-machine interface

| | | |
|---|---|---|
| 44 | DMPI | Dot-matrix(red) position indicator LED |
| 45 | DMDI | Dot-matrix(red) direction indicator LED |
| 46 | FMFS | Floor market flexible set |
| 47 | AG | Arrival gong |

### Emergency Function

| | | |
|---|---|---|
| 48 | AB | Alarm button |
| 49 | ECL | Emergency car lighting |
| 50 | FSI | Five station intercom , 4x0.75mm2 ( ≤1800 ) |
| 51 | EFO | Emergency fire operation |
| 52 | FO | Fireman's operation , |
| 53 | ER | Emergency rescure |

### Energy-saving function

| | | |
|---|---|---|
| 54 | PS | Parking service |
| 55 | ATOO | Automatic turn off/on |



## Optional functions

| | | |
|---|---|---|
| 01 | DCO | Duplex Control Operation |
| 02 | GCO | Group Control Operation 3 8 |
| 03 | IADO | In Advance Door Opening |
| 04 | REL | Re-leveling |
| 05 | ARD | Automatic rescue device |
| 06 | EAC | Elevator Air Conditioner |
| 07 | PF | Power Filter EMC |
| 08 | PRD | Power regeneration device |
| 09 | CMS | Community Monitoring System |
| 10 | | |
| 11 | | |
| 12 | | |
| 13 | | |
| 14 | | |
| 15 | | |
| 16 | VBS | |
| 17 | BB | BrailleC " |
| 18 | ACS | |
| 19 | MOIH | |
| 20 | CCTVC | |
| 21 | ED | |
| 22 | TD | |
| 23 | CSG | |
| 24 | DSEP | |

# BUILDINGEYE-JO

## BUILDINGEYE-JO TECHNICAL SPECIFICATION

| NO. | Specification | | 630(8 /p) | | | 800(10 /p) | | | 1050(14 /p) | | | 1350(18 /p) | 1600(21 /p) |
|---|---|---|---|---|---|---|---|---|---|---|---|---|---|
| 01 | kg<br>Rated capacity(kg) | | 630 | | | 800 | | | 1050 | | | 1350 | 1600 |
| 02 | Car shape | | | | | | | | | | | | |
| 03 | m/s<br>Speed(m/s) | | 1.0<br>1.75 | 1.0<br>1.75 | 1.0<br>1.75 | 1.0<br>1.75 | 1.0<br>1.75 | 1.0<br>1.75 | 1.0<br>1.75 | 1.0<br>1.75 | 1.0<br>1.75 | 1.0<br>1.75 | 1.0<br>1.75 |
| 04 | Control system | | Full collective operation | | | | | | | | | | |
| 05 | Driving system | | VVVF VVVF Driving | | | | | | | | | | |
| 06 | Door control | | VVVF VVVF Door control | | | | | | | | | | |
| 07 | Traction machine | | PM/Gearless | | | | | | | | | | |
| 08 | Communication method | | Serial Communication | | | | | | | | | | |
| 09 | * * (mm)<br>Car size(width*depth*height) | | 1100*<br>1400*<br>2350 | 1100*1550*2350 | | 1300*<br>1450*<br>2350 | 1300*1600*2350 | | 1500*<br>1600*<br>2350 | 1500*1700*2350 | | 1700*1900*2350 | 1700*2200*2350 |
| 10 | * (mm)<br>Door opening size(width*height) | | 800*2100 | | | 800*2100 | | | 900*2100 | | | 1100*2100 | 1100*2100 |
| 11 | (m)<br>Travel height(TR) | 1.0m/s | ≤45 | | | ≤45 | | | ≤45 | | | ≤45 | ≤45 |
| | | 1.75m/s | ≤75 | | | ≤75 | | | ≤75 | | | ≤75 | ≤75 |
| 12 | * (mm)<br>Hoistway size<br>(width*height) | | 2200*<br>1850 | 2200*2050 | | 2400*<br>1950 | 2400*2050 | | 2600*<br>2050 | 2600*2150 | | 3050*2350 | 3050*2650 |
| 13 | Motor position | | In the top of the shaft | | | | | | | | | | |
| 14 | (mm)<br>Overhead(OH) | 1.0m/s | 4700 | 4700 | 4700 | 4700 | 4700 | 4700 | 4700 | 4700 | 4700 | 4700 | 4700 |
| | | 1.75m/s | 4900 | 4900 | 4900 | 4900 | 4900 | 4900 | 4900 | 4900 | 4900 | 4900 | 4900 |
| 15 | (mm)<br>Pit depth(PD) | 1.0m/s | 1500 | 1700 | 1600 | 1500 | 1800 | 1600 | 1500 | 1900 | 1600 | 2000 | 2000 |
| | | 1.75m/s | 1650 | 1850 | 1750 | 1650 | 1950 | 1750 | 1650 | 2050 | 1750 | 2150 | 2150 |
| 16 | Main power supply | | 380V 50Hz ≤4Ω | | | | | | | | | | |
| | | 1.0m/s | 3*6mm²+2*6mm² | | | | | | | | | 3*10mm²+2*6mm² | |
| | | 1.75m/s | 3*6mm²+2*6mm² | | | | | | 3*10mm²+2*6mm² | | | | |

≤700mm

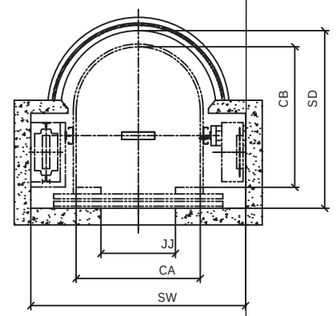


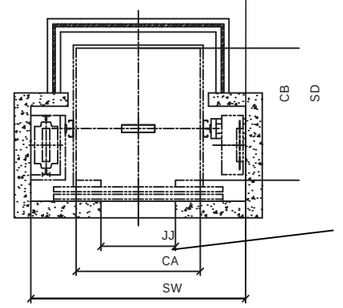

| NO. | Specification | 630(8 /p) | 800(10 /p) | 1050(14 /p) | 1350(18 /p) | 1600(21 /p) |
|---|---|---|---|---|---|---|
| 01 | kg<br>Rated capacity(kg) | 630 | 800 | 1050 | 1350 | 1600 |
| 02 | | | | | | |
| 03 | m/s<br>Speed(m/s) | | | | | |

Diamond panoramic elevator
shaft plan

shaft section plan